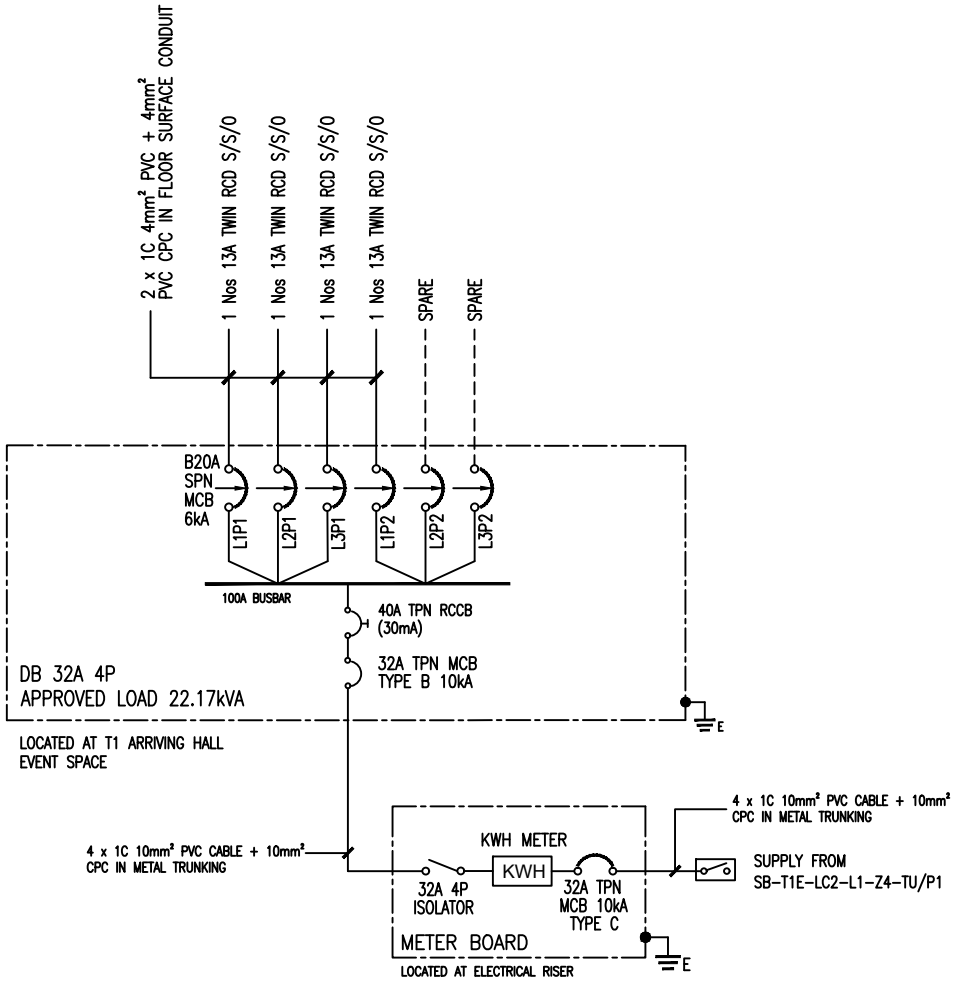

EMA LICENCED ELECTRICAL WORKER
TECHNICIAN
NYAP JUNN YEAN
8/33613
SINGAPORE

CLIENT / ADDRESS :	MAIN CONTRACTOR :	ELECTRICAL CONTRACTOR :	DRAWING TITLE :	LEW :	CHECKED :	DATE :
INVESSO PTE LTD 80 AIRPORT BOULEVARD CHANGI AIRPORT TERMINAL 1 ARRIVAL HALL WEST SINGAPORE 819642			SINGLE LINE DIAGRAM (SLD)	NYAP JUNN YEAN EMA Licence No. : 8/33613		10 NOV 2025
					DRAWING NO. : I2R-IVS-CAT1-SLD	REV : 0

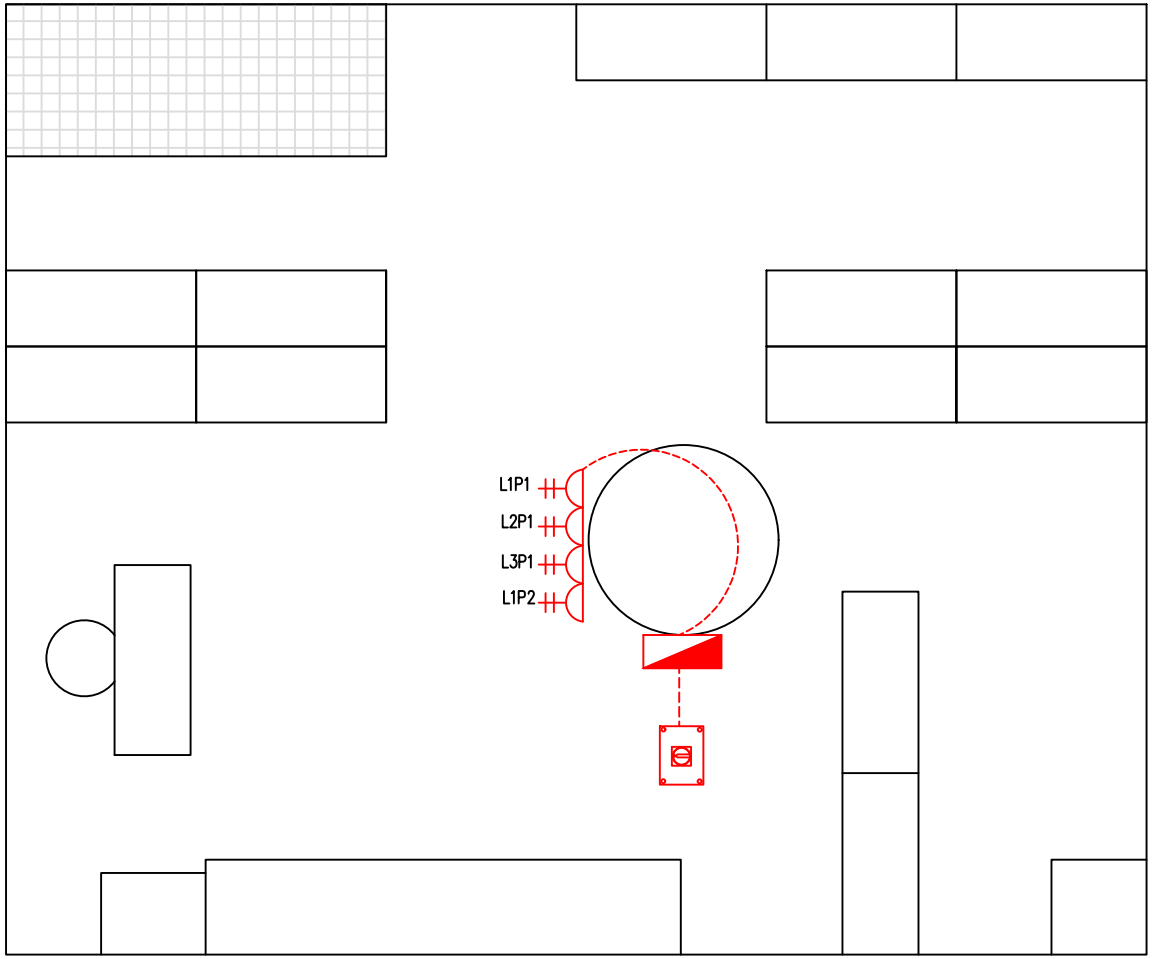

13A TWIN S/S/O

DB

ON CEILING
32A TPN ISOLATOR

EMA LICENCED ELECTRICAL WORKER
TECHNICIAN
NYAP JUNN YEAN
8/33613
SINGAPORE

CLIENT / ADDRESS :	MAIN CONTRACTOR :	ELECTRICAL CONTRACTOR :	DRAWING TITLE :	LEW :	CHECKED :	DATE :
INVESSO PTE LTD 80 AIRPORT BOULEVARD CHANGI AIRPORT TERMINAL 1 ARRIVAL HALL WEST SINGAPORE 819642			SINGLE LINE DIAGRAM (SLD)	NYAP JUNN YEAN EMA Licence No. : 8/33613		10 NOV 2025
					DRAWING NO. : I2R-IVS-CAT1-SLD	REV : 0